This sheet is developed to find the design equations for an uneven splitter similar to that proposed by Adams. I want to have a separate DOF to allow the attenuation to Port 2 (α) to be independent from attenuation to Port 3 (β). I think that adding R_w as below will do the trick by making Port 3 match independent from α. For this one I added a second output at Port Two. If the port three output is far down, then this becomes an even splitter between the two ouptuts in "Port Two". The idea here is to get an evenly divided output, and then an attenuated monitoring tap. This might be useful for common-mode testing (but watch out for ANY differences between the two Port Two paths!!

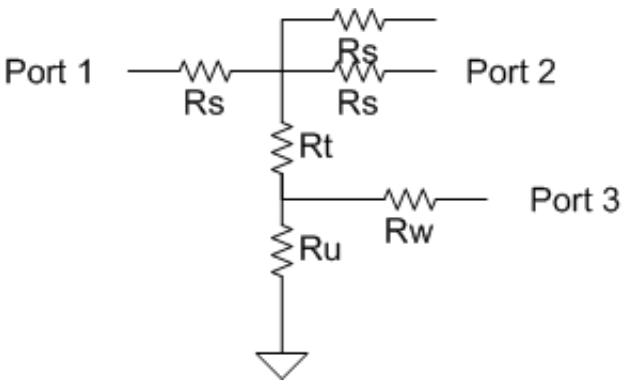

This circuit has four equations, one for match at Ports 1 and 2 (they are Symmetrical), one for match at Port 3, one for α, and one for β.

The Port 1 (and two) Match condition:

$$Z_0 = R_s + \frac{1}{\frac{1}{R_s + Z_0} + \frac{1}{R_s + Z_0} + \frac{1}{R_p}}$$

$$Z_0 = R_s + \frac{1}{\frac{2}{R_s + Z_0} + \frac{1}{R_p}} \qquad \textbf{(1)}$$

Where R_p is a convenient notation for the impedance seen "looking down" into R_t from the node between R_s and R_w.

$$R_p = R_t + \frac{1}{\frac{1}{R_w + Z_0} + \frac{1}{R_u}}$$

$$R_p = R_t + \frac{1}{\frac{1}{R_u} + \frac{1}{R_w + Z_0}} \qquad \textbf{(2)}$$

The equation for α is derived by looking at voltage dividers. Subscripts on Voltage indicate port number, with V_p meaning the voltage at the node in the middle of the top branch.

$$V_p = \frac{\left(\frac{1}{\frac{1}{R_p} + \frac{1}{R_s + Z_0} + \frac{1}{R_s + Z_0}}\right) \cdot V_1}{R_s + \frac{1}{\frac{1}{R_p} + \frac{1}{R_s + Z_0} + \frac{1}{R_s + Z_0}}}$$

$$V_p = \frac{V_1}{\left(\frac{2}{R_s + Z_0} + \frac{1}{R_p}\right)\left(R_s + \frac{1}{\frac{2}{R_s + Z_0} + \frac{1}{R_p}}\right)} \tag{3}$$

$$V_2 = \frac{Z_0 \cdot V_p}{R_s + Z_0}$$

$$V_2 = \frac{Z_0\, V_p}{R_s + Z_0} \tag{4}$$

subs(**(3)**, **(4)**)

$$V_2 = \frac{Z_0\, V_1}{\left(\frac{2}{R_s + Z_0} + \frac{1}{R_p}\right)\left(R_s + \frac{1}{\frac{2}{R_s + Z_0} + \frac{1}{R_p}}\right)(R_s + Z_0)} \tag{5}$$

$$\frac{\textbf{(5)}}{V_1}$$

$$\frac{V_2}{V_1} = \frac{Z_0}{\left(\frac{2}{R_s + Z_0} + \frac{1}{R_p}\right)\left(R_s + \frac{1}{\frac{2}{R_s + Z_0} + \frac{1}{R_p}}\right)(R_s + Z_0)} \tag{6}$$

simplify(**(6)**)

$$\frac{V_2}{V_1} = \frac{R_p\, Z_0}{R_s\, Z_0 + 3\, R_s\, R_p + R_s^2 + R_p\, Z_0} \tag{7}$$

$$\frac{V_2}{V_1} = \alpha$$

$$\frac{V_2}{V_1} = \alpha \tag{8}$$

subs(**(8)**, **(7)**)

$$\alpha = \frac{R_p\, Z_0}{R_s\, Z_0 + 3\, R_s\, R_p + R_s^2 + R_p\, Z_0} \tag{9}$$

Let's plug in the match condition from **(1)**

isolate(**(1)**, R_p)

$$R_p = -\frac{-Z_0^2 + R_s^2}{3\,R_s - Z_0} \tag{10}$$

subs(**(10)**, **(9)**)

$$\alpha = -\frac{\left(-Z_0^2 + R_s^2\right) Z_0}{\left(3\,R_s - Z_0\right)\left(R_s\,Z_0 - \frac{3\,R_s\left(-Z_0^2 + R_s^2\right)}{3\,R_s - Z_0} + R_s^2 - \frac{\left(-Z_0^2 + R_s^2\right) Z_0}{3\,R_s - Z_0}\right)} \tag{11}$$

isolate(**(11)**, R_s)

$$R_s = -\frac{Z_0\left(-1 + \alpha\right)}{1 + \alpha} \tag{12}$$

So, same as Adams, first step is to choose α and find out what R_s is going to be.

with(*plots*, *implicitplot*) : *implicitplot*(*subs*($Z_0 = 50$, **(12)**), $\alpha = 0..1$, $R_s = 0..100$)

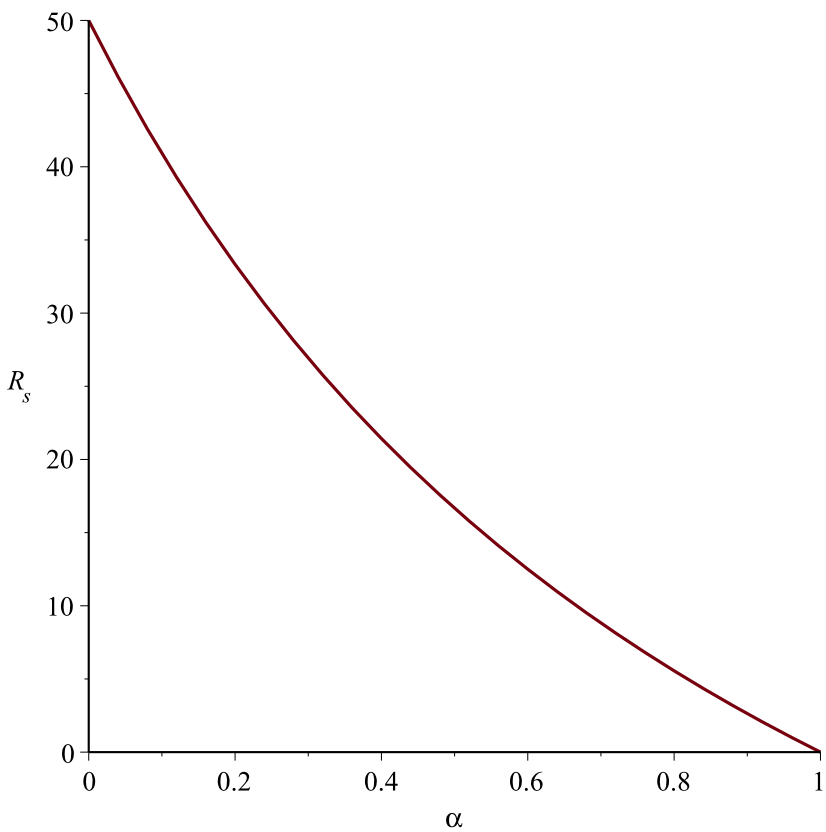

This looks like any value of α is feasible. Let's see what happens to P.

subs(**(12)**, **(10)**)

$$R_p = -\frac{-Z_0^2 + \frac{Z_0^2 (-1+\alpha)^2}{(1+\alpha)^2}}{-\frac{3 Z_0 (-1+\alpha)}{1+\alpha} - Z_0} \tag{13}$$

simplify(**(13)**)

$$R_p = -\frac{2 Z_0 \alpha}{(-1+2\alpha)(1+\alpha)} \tag{14}$$

$implicitplot\left(subs\left(Z_0 = 50, \textbf{(14)}\right), \alpha = 0..1, R_p = 0..10000\right)$

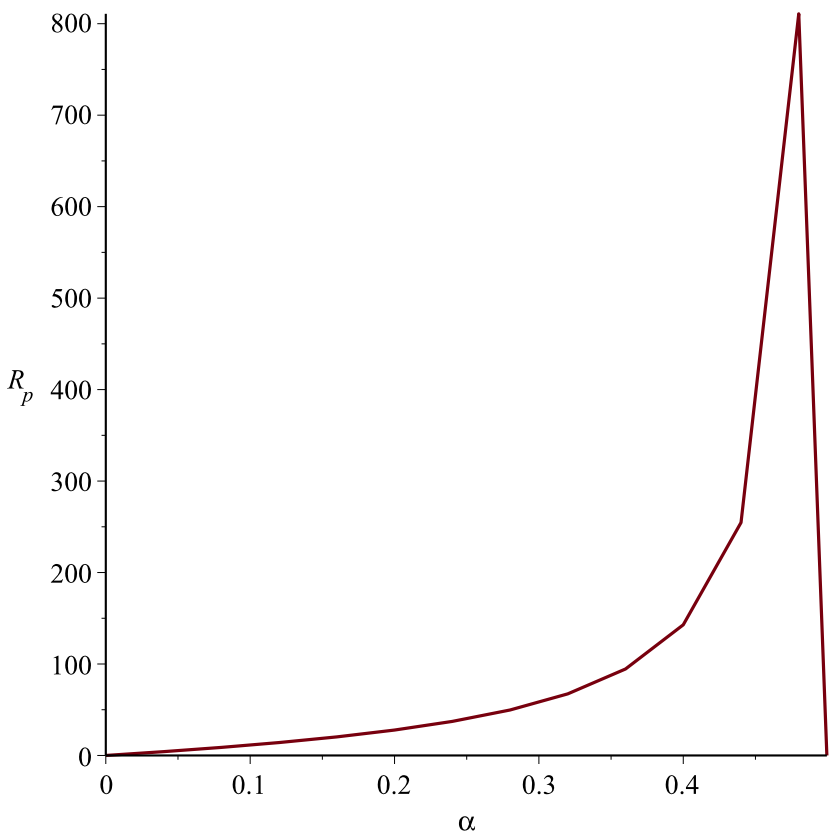

So here things blow up if we try for $\alpha > 0.5$, not surprising at all.

The Port 3 match condition is:

$$Z_0 = R_w + \frac{1}{\frac{1}{R_u} + \frac{1}{R_t + \frac{(R_s + Z_0)}{3}}}$$

$$Z_0 = R_w + \frac{1}{\frac{1}{R_u} + \frac{1}{R_t + \frac{1}{3} R_s + \frac{1}{3} Z_0}} \tag{15}$$

Finding the formula for Port 3 attenuation β:

First to the node in the middle of the top branch,

(3)

$$V_p = \frac{V_1}{\left(\frac{2}{R_s + Z_0} + \frac{1}{R_p}\right)\left(R_s + \frac{1}{\frac{2}{R_s + Z_0} + \frac{1}{R_p}}\right)} \tag{16}$$

Call V_v the voltage at the node on the other side of R_t.

$$V_v = \frac{V_p}{R_p}\left(\frac{1}{\frac{1}{R_u} + \frac{1}{R_w + Z_0}}\right)$$

$$V_v = \frac{V_p}{R_p\left(\frac{1}{R_u} + \frac{1}{R_w + Z_0}\right)} \tag{17}$$

$$V_3 = \frac{V_v}{R_w + Z_0} \cdot Z_0$$

$$V_3 = \frac{V_v Z_0}{R_w + Z_0} \tag{18}$$

subs(**(17)**, **(18)**)

$$V_3 = \frac{V_p Z_0}{R_p\left(\frac{1}{R_u} + \frac{1}{R_w + Z_0}\right)(R_w + Z_0)} \tag{19}$$

subs(**(16)**, **(19)**)

$$V_3 = \frac{V_1 Z_0}{\left(\frac{2}{R_s + Z_0} + \frac{1}{R_p}\right)\left(R_s + \frac{1}{\frac{2}{R_s + Z_0} + \frac{1}{R_p}}\right) R_p\left(\frac{1}{R_u} + \frac{1}{R_w + Z_0}\right)(R_w + Z_0)} \tag{20}$$

simplify(**(20)**)

$$V_3 = \frac{V_1 (R_s + Z_0) R_u Z_0}{(R_w + Z_0 + R_u)(R_s Z_0 + 3 R_s R_p + R_s^2 + R_p Z_0)} \tag{21}$$

$$subs\left(\frac{V_3}{V_1} = \beta, \frac{\textbf{(21)}}{V_1}\right)$$

$$\beta = \frac{(R_s + Z_0)\, R_u\, Z_0}{(R_w + Z_0 + R_u)\,(R_s Z_0 + 3\, R_s R_p + R_s^2 + R_p Z_0)} \tag{22}$$

Now plug in match condition into the β definition, first expressing R_w in terms of R_p, R_t, and R_u

isolate(**(2)**, R_w)

$$R_w = \frac{1}{\frac{1}{R_p - R_t} - \frac{1}{R_u}} - Z_0 \tag{23}$$

subs(**(23)**, **(22)**)

$$\beta = \frac{(R_s + Z_0)\, R_u\, Z_0}{\left(\frac{1}{\frac{1}{R_p - R_t} - \frac{1}{R_u}} + R_u\right)(R_s Z_0 + 3\, R_s R_p + R_s^2 + R_p Z_0)} \tag{24}$$

simplify(**(24)**)

$$\beta = -\frac{(R_s + Z_0)\, Z_0\,(-R_u + R_p - R_t)}{R_u\,(R_s Z_0 + 3\, R_s R_p + R_s^2 + R_p Z_0)} \tag{25}$$

subs(**(23)**, **(15)**)

$$Z_0 = \frac{1}{\frac{1}{R_p - R_t} - \frac{1}{R_u}} - Z_0 + \frac{1}{\frac{1}{R_u} + \frac{1}{R_t + \frac{1}{3} R_s + \frac{1}{3} Z_0}} \tag{26}$$

simplify(**(26)**)

$$Z_0 = -\frac{1}{(-R_u + R_p - R_t)\,(3\, R_t + R_s + Z_0 + 3\, R_u)}\big(-6\, R_u Z_0 R_t + 3\, R_u R_p Z_0 - Z_0 R_u R_s + 3\, Z_0 R_p R_t + Z_0 R_s R_p - Z_0 R_t R_s + 3\, R_p R_u^2 - R_u Z_0^2 - 2\, Z_0 R_u^2 + R_p Z_0^2 - 3\, Z_0 R_t^2 - Z_0^2 R_t + R_u^2 R_s\big) \tag{27}$$

isolate(**(27)**, R_t)

$$R_t = -\frac{1}{6}\,\frac{1}{Z_0}\Big(-3\, R_p Z_0 + R_s Z_0 + Z_0^2 + 6\, R_u Z_0 + \big(9\, R_p^2 Z_0^2 + 6\, R_p Z_0^2 R_s + 6\, R_p Z_0^3 + R_s^2 Z_0^2 + 2\, Z_0^3 R_s + Z_0^4 + 6\, R_u^2 Z_0^2 + 18\, Z_0 R_p R_u^2 + 6\, Z_0 R_u^2 R_s\big)^{1/2}\Big) \tag{28}$$

subs(**(28)**, **(25)**)

$$\beta = -\frac{1}{R_u\,(R_s Z_0 + 3\, R_s R_p + R_s^2 + R_p Z_0)}\Big((R_s + Z_0)\, Z_0\Big(-R_u + R_p + \frac{1}{6}\,\frac{1}{Z_0}\Big(-3\, R_p Z_0 + R_s Z_0 + Z_0^2 + 6\, R_u Z_0 \tag{29}$$

$$+$$

$$\left(9 R_p^2 Z_0^2 + 6 R_p Z_0^2 R_s + 6 R_p Z_0^3 + R_s^2 Z_0^2 + 2 Z_0^3 R_s + Z_0^4 + 6 R_u^2 Z_0^2 + 18 Z_0 R_p R_u^2 + 6 Z_0 R_u^2 R_s\right)^{1/2}\Big)\Big)\Big)$$

isolate(**(29)**, R_u)

$$R_u = -\Big(2 Z_0 \beta \left(13 Z_0 R_s^2 R_p + 9 R_p^2 R_s^2 + 6 R_p R_s^3 + 12 Z_0 R_s R_p^2 + 8 R_p Z_0^2 R_s + 3 R_p^2 Z_0^2 + 3 R_s^3 Z_0 + R_s^4 + 3 R_s^2 Z_0^2 + Z_0^3 R_s + R_p Z_0^3\right)\Big) \Big/ \Big(6 \beta^2 R_s^4 - 3 R_s^2 Z_0^2 - 3 Z_0^3 R_s - 3 R_p Z_0^3 - R_s^3 Z_0 + 48 \beta^2 R_s^2 R_p Z_0 + 12 \beta^2 R_s Z_0^2 R_p + 36 \beta^2 R_s R_p^2 Z_0 - Z_0^4 + 6 \beta^2 R_s^2 Z_0^2 + 12 \beta^2 R_s^3 Z_0 + 54 \beta^2 R_s^2 R_p^2 + 36 \beta^2 R_s^3 R_p + 6 \beta^2 R_p^2 Z_0^2 - 3 Z_0 R_s^2 R_p - 6 R_p Z_0^2 R_s\Big) \quad \textbf{(30)}$$

simplify(**(30)**)

$$R_u = -\Big(2 Z_0 \beta \left(13 Z_0 R_s^2 R_p + 9 R_p^2 R_s^2 + 6 R_p R_s^3 + 12 Z_0 R_s R_p^2 + 8 R_p Z_0^2 R_s + 3 R_p^2 Z_0^2 + 3 R_s^3 Z_0 + R_s^4 + 3 R_s^2 Z_0^2 + Z_0^3 R_s + R_p Z_0^3\right)\Big) \Big/ \Big(6 \beta^2 R_s^4 - 3 R_s^2 Z_0^2 - 3 Z_0^3 R_s - 3 R_p Z_0^3 - R_s^3 Z_0 + 48 \beta^2 R_s^2 R_p Z_0 + 12 \beta^2 R_s Z_0^2 R_p + 36 \beta^2 R_s R_p^2 Z_0 - Z_0^4 + 6 \beta^2 R_s^2 Z_0^2 + 12 \beta^2 R_s^3 Z_0 + 54 \beta^2 R_s^2 R_p^2 + 36 \beta^2 R_s^3 R_p + 6 \beta^2 R_p^2 Z_0^2 - 3 Z_0 R_s^2 R_p - 6 R_p Z_0^2 R_s\Big) \quad \textbf{(31)}$$

subs(**(12)**, **(14)**, **(31)**)

$$R_u = -\Bigg(2 Z_0 \beta \Bigg(-\frac{26 Z_0^4 (-1+\alpha)^2 \alpha}{(1+\alpha)^3 (-1+2\alpha)} + \frac{36 Z_0^4 \alpha^2 (-1+\alpha)^2}{(-1+2\alpha)^2 (1+\alpha)^4} + \frac{12 Z_0^4 \alpha (-1+\alpha)^3}{(-1+2\alpha)(1+\alpha)^4} - \frac{48 Z_0^4 (-1+\alpha) \alpha^2}{(1+\alpha)^3 (-1+2\alpha)^2} + \frac{16 Z_0^4 \alpha (-1+\alpha)}{(-1+2\alpha)(1+\alpha)^2} + \frac{12 Z_0^4 \alpha^2}{(-1+2\alpha)^2 (1+\alpha)^2} - \frac{3 Z_0^4 (-1+\alpha)^3}{(1+\alpha)^3} + \frac{Z_0^4 (-1+\alpha)^4}{(1+\alpha)^4} + \frac{3 Z_0^4 (-1+\alpha)^2}{(1+\alpha)^2} - \frac{Z_0^4 (-1+\alpha)}{1+\alpha} - \frac{2 Z_0^4 \alpha}{(-1+2\alpha)(1+\alpha)}\Bigg)\Bigg) \Bigg/ \Bigg(\frac{6 \beta^2 Z_0^4 (-1+\alpha)^4}{(1+\alpha)^4} - \frac{3 Z_0^4 (-1+\alpha)^2}{(1+\alpha)^2} + \frac{3 Z_0^4 (-1+\alpha)}{1+\alpha} + \frac{6 Z_0^4 \alpha}{(-1+2\alpha)(1+\alpha)} + \frac{Z_0^4 (-1+\alpha)^3}{(1+\alpha)^3} - \frac{96 \beta^2 Z_0^4 (-1+\alpha)^2 \alpha}{(1+\alpha)^3 (-1+2\alpha)} + \frac{24 \beta^2 Z_0^4 (-1+\alpha) \alpha}{(1+\alpha)^2 (-1+2\alpha)} - \frac{144 \beta^2 Z_0^4 (-1+\alpha) \alpha^2}{(1+\alpha)^3 (-1+2\alpha)^2} - Z_0^4 + \frac{6 \beta^2 Z_0^4 (-1+\alpha)^2}{(1+\alpha)^2} - \frac{12 \beta^2 Z_0^4 (-1+\alpha)^3}{(1+\alpha)^3} + \frac{216 \beta^2 Z_0^4 (-1+\alpha)^2 \alpha^2}{(1+\alpha)^4 (-1+2\alpha)^2} + \frac{72 \beta^2 Z_0^4 (-1+\alpha)^3 \alpha}{(1+\alpha)^4 (-1+2\alpha)} \quad \textbf{(32)}$$

$$+\frac{24\,\beta^2 Z_0^4 \alpha^2}{(-1+2\,\alpha)^2 (1+\alpha)^2}+\frac{6\,Z_0^4 (-1+\alpha)^2 \alpha}{(1+\alpha)^3 (-1+2\,\alpha)}-\frac{12\,Z_0^4 \alpha (-1+\alpha)}{(-1+2\,\alpha)(1+\alpha)^2}\Bigg)$$

simplify(**(32)**)

$$R_u=-\frac{2\,\beta Z_0}{2\,\alpha-1+3\,\beta^2} \tag{33}$$

subs(**(33)**, **(22)**)

$$\beta=-\frac{2\,(R_s+Z_0)\,\beta Z_0^2}{(2\,\alpha-1+3\,\beta^2)\left(R_w+Z_0-\frac{2\,\beta Z_0}{2\,\alpha-1+3\,\beta^2}\right)(R_s Z_0+3\,R_s R_p+R_s^2+R_p Z_0)} \tag{34}$$

subs(**(12)**, **(14)**, **(34)**)

$$\beta=-\left(2\left(-\frac{Z_0(-1+\alpha)}{1+\alpha}+Z_0\right)\beta Z_0^2\right)\Bigg/\left((2\,\alpha-1+3\,\beta^2)\left(R_w+Z_0-\frac{2\,\beta Z_0}{2\,\alpha-1+3\,\beta^2}\right)\left(-\frac{Z_0^2(-1+\alpha)}{1+\alpha}+\frac{6\,Z_0^2(-1+\alpha)\,\alpha}{(1+\alpha)^2(-1+2\,\alpha)}+\frac{Z_0^2(-1+\alpha)^2}{(1+\alpha)^2}-\frac{2\,Z_0^2\alpha}{(-1+2\,\alpha)(1+\alpha)}\right)\right) \tag{35}$$

simplify(**(35)**, *radical*)

$$\beta=\frac{2\,Z_0\,\beta\,(-1+2\,\alpha)}{2\,\alpha R_w-R_w+3\,\beta^2 R_w+2\,\alpha Z_0-Z_0+3\,\beta^2 Z_0-2\,\beta Z_0} \tag{36}$$

isolate(**(36)**, R_w)

$$R_w=\frac{2\,Z_0(-1+2\,\alpha)-2\,\alpha Z_0+Z_0-3\,\beta^2 Z_0+2\,\beta Z_0}{2\,\alpha-1+3\,\beta^2} \tag{37}$$

simplify(**(37)**)

$$R_w=\frac{Z_0\left(-1+2\,\alpha-3\,\beta^2+2\,\beta\right)}{2\,\alpha-1+3\,\beta^2} \tag{38}$$

subs(**(33)**, **(38)**, **(2)**)

$$R_p=R_t+\frac{1}{-\frac{1}{2}\,\frac{2\,\alpha-1+3\,\beta^2}{\beta Z_0}+\frac{1}{\frac{Z_0\left(-1+2\,\alpha-3\,\beta^2+2\,\beta\right)}{2\,\alpha-1+3\,\beta^2}+Z_0}} \tag{39}$$

subs(**(14)**, **(39)**)

$$-\frac{2\,Z_0\,\alpha}{(-1+2\,\alpha)(1+\alpha)}=R_t+\frac{1}{-\frac{1}{2}\,\frac{2\,\alpha-1+3\,\beta^2}{\beta Z_0}+\frac{1}{\frac{Z_0\left(-1+2\,\alpha-3\,\beta^2+2\,\beta\right)}{2\,\alpha-1+3\,\beta^2}+Z_0}} \tag{40}$$

isolate(**(40)**, R_t)

$$R_t = -\frac{2\,Z_0\,\alpha}{(-1+2\,\alpha)\,(1+\alpha)} - \frac{1}{-\frac{1}{2}\,\frac{2\,\alpha-1+3\,\beta^2}{\beta\,Z_0} + \frac{1}{\frac{Z_0\,(-1+2\,\alpha-3\,\beta^2+2\,\beta)}{2\,\alpha-1+3\,\beta^2}+Z_0}} \tag{41}$$

simplify(**(41)**)

$$R_t = \frac{2\,(-\alpha+\alpha\,\beta+\beta-\beta^2)\,Z_0}{(2\,\alpha-1+3\,\beta^2)\,(1+\alpha)} \tag{42}$$

(12), (14)

$$R_s = -\frac{Z_0\,(-1+\alpha)}{1+\alpha},\ R_p = -\frac{2\,Z_0\,\alpha}{(-1+2\,\alpha)\,(1+\alpha)} \tag{43}$$

(42), (33), (38)

$$R_t = \frac{2\,(-\alpha+\alpha\,\beta+\beta-\beta^2)\,Z_0}{(2\,\alpha-1+3\,\beta^2)\,(1+\alpha)},\ R_u = -\frac{2\,\beta\,Z_0}{2\,\alpha-1+3\,\beta^2},\ R_w = \frac{Z_0\,(-1+2\,\alpha-3\,\beta^2+2\,\beta)}{2\,\alpha-1+3\,\beta^2} \tag{44}$$